Technical data sheet

starQuick clip SWS

Item number: 2146923

Highly stable clip to accept plastic and metal electrical and sanitary pipes, as well as the Quick Pipe electrical installation pipe. Universal fastening options on walls, ceilings and steel structures, both indoors and outdoors. Flexible clamping range of several millimetres. Toolless pipe mounting. Can be arranged to up to Ø 28 mm, also with OBO Quick clip or starQuick clip. For high load values, can be combined with double bracket. Can be mounted on profile rails for variable spacings and numbers of clips.

HALOGEN FREE

PA Polyamide

Master data

Item number	2146923
Type	SQ-12 T20 SWS
Description 1	starQuick clip
Manufacturer	OBO
Dimension	11,5-15mm
Colour	Signal white; RAL 9003
Material	Polyamide
Smallest sales unit	1
Unit of quantity	Packaging unit
Weight	12 kg
Weight unit	kg/100 PUs

Technical data sheet

starQuick clip SWS

Item number: 2146923

Dimensions

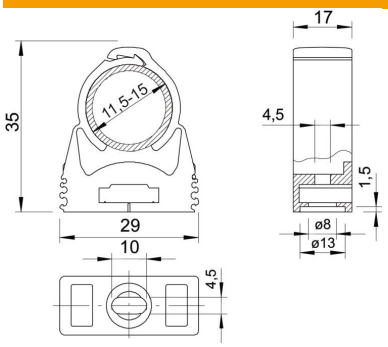

Dimension A	29 mm
Dimension B	17 mm
Dimension H	35 mm

Technical data

Expandable	yes
Number of cables/pipes	1
Pull-out value	550 N
Fastening type	Screw hole
Breaking load	550 kN
Flame-resistant	acc. to VDE 0471/DIN 695 Part 2-1, test temperature 650°C
Closed	yes
Halogen-free	yes
With inlay	no
Nominal size	12-14
Snap system	yes
Quick clip installation	Duchgangsloch mit starQuick-Mutter M6 oder M8
Clamping range D, max.	15 mm
Clamping range D, min.	11.5 mm
UV-resistant	yes